PRO CRAFT

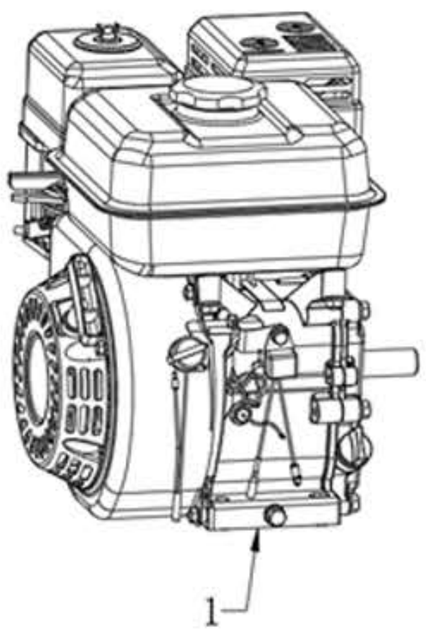

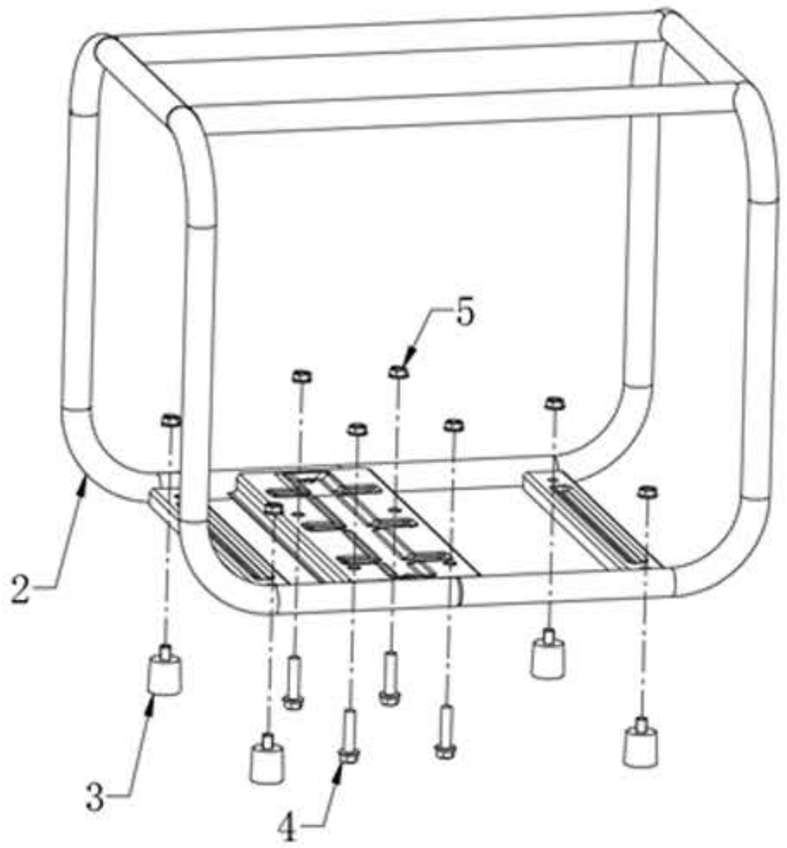

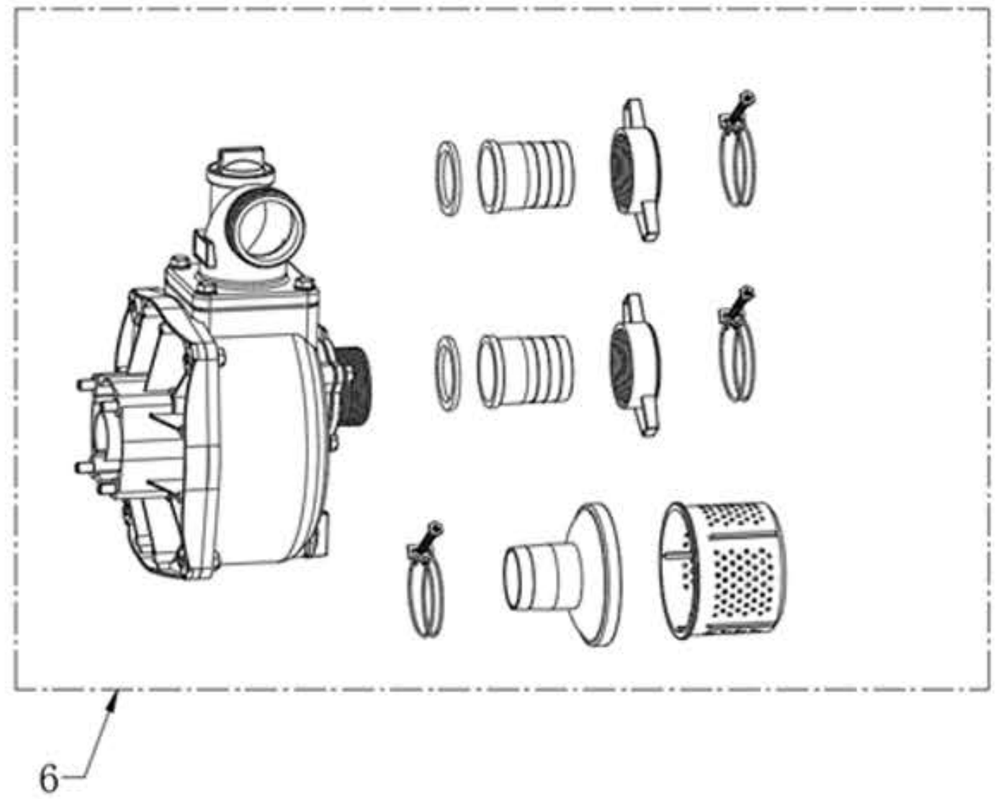

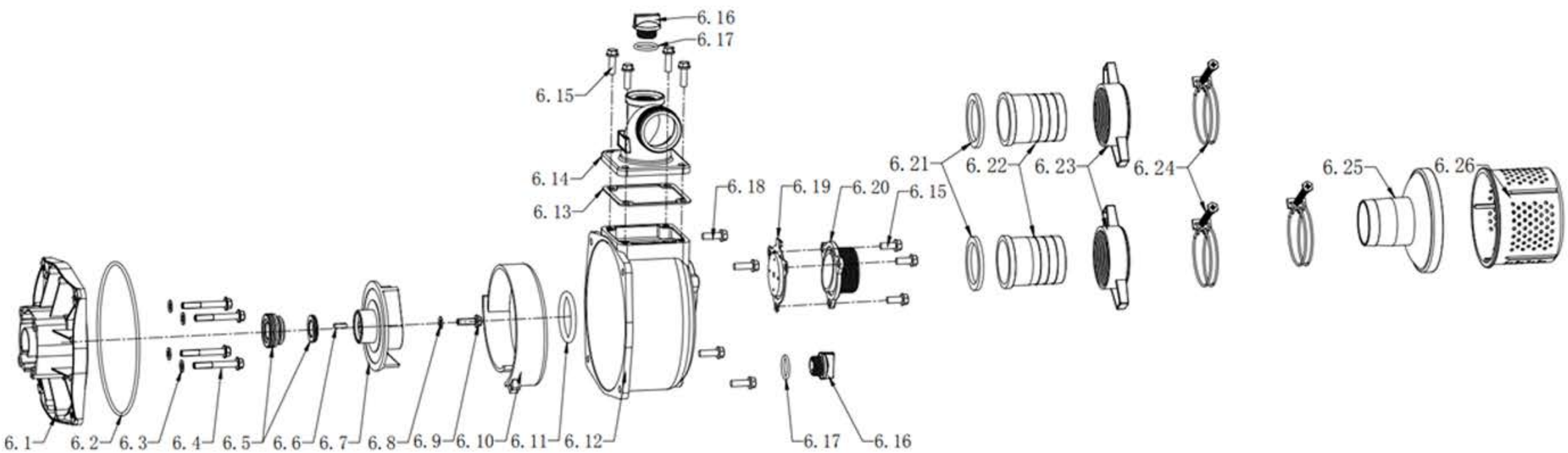

WP30